* RoHS COMPLIANT *

| ✳ REVISIONS | | | | | |
|---|---|---|---|---|---|
| LTR | DESCRIPTION | DATE | REVISED | APPROVED | |
| | | | | | |

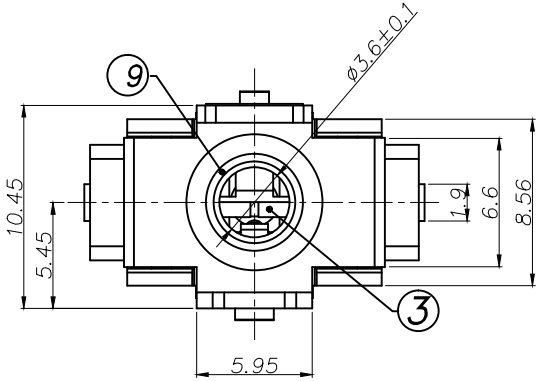


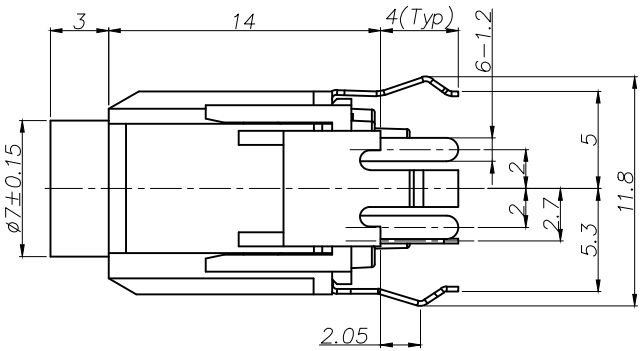


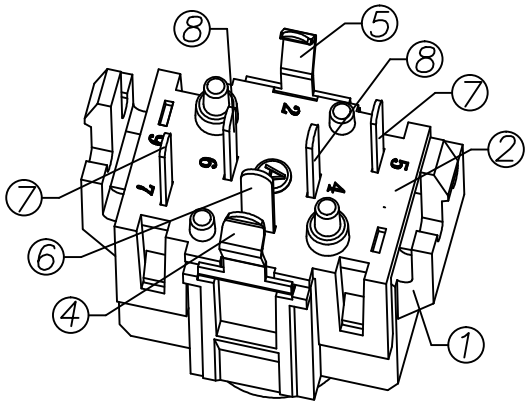


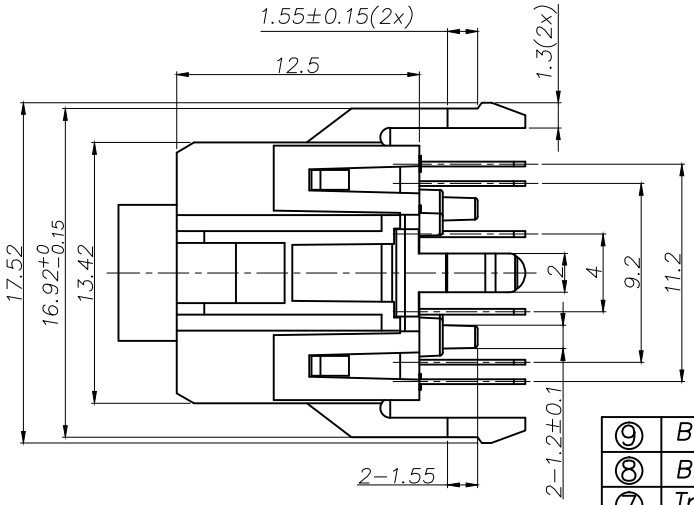


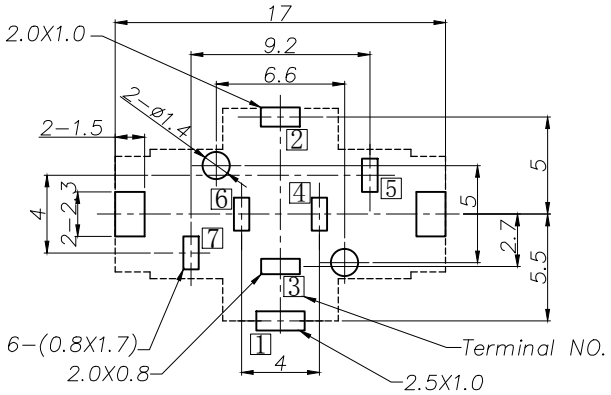


RECOMMENDED P.C.B. LAYOUT

UNSPECIFIED TOLERANCE: ±0.05

(COPPER-SIDED VIEW)

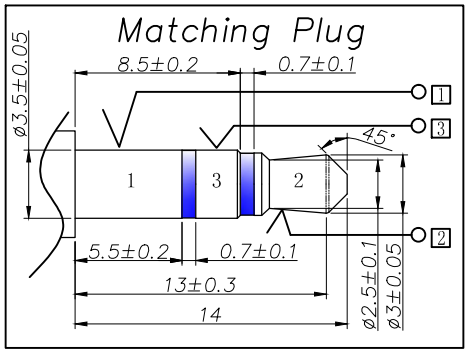


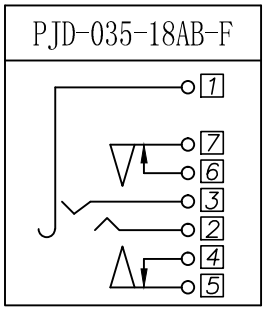


| NO. | DESCRIPTION | QTY | MATERIAL | REMARK |
|---|---|---|---|---|
| ⑨ | Bushing | 1 | Copper alloy | Nickel Plating |
| ⑧ | Break terminal [6] [4] | 2 | Brass 0.3t | Silver Plating |
| ⑦ | Transfer spring [7] [5] | 2 | Phosphor bronze 0.25t | Silver Plating |
| ⑥ | Ring spring [3] | 1 | Phosphor bronze 0.25t | Silver Plating |
| ⑤ | Tip spring [2] | 1 | Phosphor bronze 0.25t | Silver Plating |
| ④ | Earth spring [1] | 1 | Phosphor bronze 0.25t | Silver Plating |
| ③ | Insulator | 1 | POM | UL-94HB(White) |
| ② | Cover | 1 | POM | UL-94HB(White) |
| ① | Housing | 1 | PBT | UL-94V0(Black) |

| | | | | | |
|---|---|---|---|---|---|
| DWN | LILY | DATE | 2017.02.14 | 3RD ANGLE PROJECTION | NAME: MINIATURE JACK |
| CHKD | ANDY | DATE | 2017.02.14 | | CAT NO. PJD-035-18AB-F |
| APVD | JON | DATE | 2017.02.14 | UNIT: mm | |
| JKCR Electronics Co., Ltd. | | | | | DWN. NO. F-035-18 |

001

UNLESS OTHERWISE SPECIFIED, TOLERANCE ON DECIMAL: ±0.3